ZOOMLION

Zoomlion Heavy Industry Science & Technology Co.,Ltd.
Add: No.677, Lugu Road, Zoomlion Industrial Park, Changsha, Hunan, China, 410205

website:en.zoomlion.com 2020.01.19

60 ton capacity
ZCC600V

New V series

ZOOMLION

40 PRODUCTS

VISION CREATES FUTURE

CONTENTS

DIMENSIONS

Basic machine with undercarriage

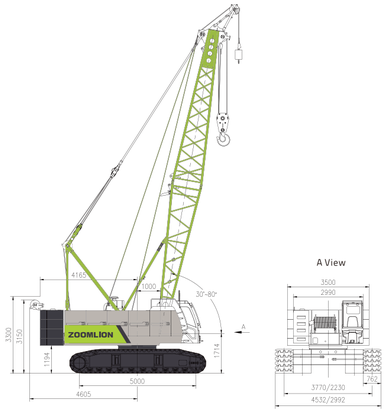

Operating weight

The operating weight includes the basic machine with crawlers, 2 main winches including wire ropes (185m and 130m) and 52m main boom, consisting of FA-frame, boom foot (6.5m), boom head(6.5m),17.4 t rear counterweight , and 60t hook block.

Total weight ---------- approx.49.5t

Equipment

Main boom Max. Length ---------- 52m

Fixed jib ---------- 7-15m

Max. combination ---------- main boom43 m

---------- fixed jib 15m

Max. lifting moment ---------- 222t.m

Max. lifting capacity on fixed jib ---------- 12t

TECHNICAL FEATURE

High working efficiency

- Single rope speed of H1 and H2 reaches 145m/min (the 3rd layer).
- The optional free-fall winch helps to improve the efficiency of hoisting.

Optimization in transport and dismantling

- Tracks are extendible. Max.width of whole machine in transportation is 3m
- The weight of a single counterweight plate shall not exceed 5.1t. A small auxiliary crane can help to finish the assembly.

Driver comfort

- The new cabin design sets new standards in terms of ergonomics and safety. Adjustable crane operator seat,adopts 10.4 inch touch sreen and camera monitor with excellent visibility with perfect all-round vision.

BOOM COMBINATION

Code	Operating mode	Boom combination
S	Main boom	13m 52m
SH-1	main boom+tip boom (primary hook)	13m-52m
SH-2	main boom+tip boom (auxiliary hook)	13m-52m
SF-1	Main boom+fixed jib (auxiliary hook,without primary hook)	(28m-43m)+(7m-15m)
SF-2	Main boom+fixed jib (auxiliary hook with primary hook)	(28m-43m)+(7m-15m)
SF-3	Mian boom +fixed jib (primary)	(28m-43m)+(7m-15m)

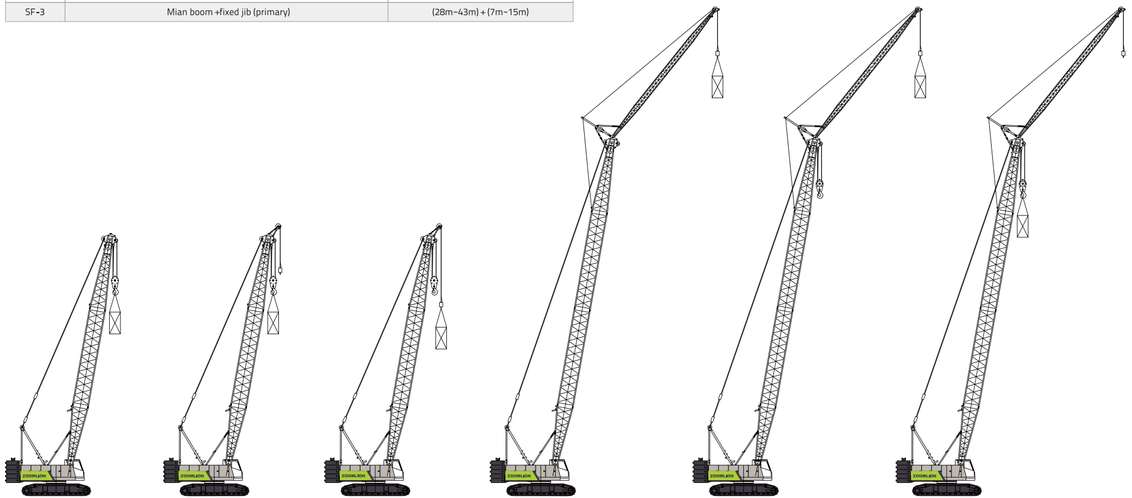

S SH-1 SH-2 SF-1 SF-2 SF-3

TRANSPORT DIMENSIONS AND WEIGHTS

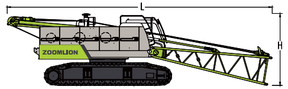

Basic machine1 (with pivot section)	1piece*
Length(L)	12100 mm
Width (W)	2990 mm
Height (H)	3300 mm
Weight	30600 kg

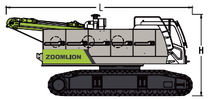

Basic machine 2	1piece*
Length(L)	7550 mm
Width (W)	2990 mm
Height (H)	3300 mm
Weight	29670 kg

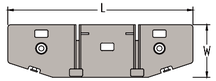

Counterweight base	1piece
Length(L)	3500 mm
Width (W)	1000 mm
Height (H)	560 mm
Weight	3300 kg

Counterweight plate	1piece
Length(L)	3500 mm
Width (W)	1000 mm
Height (H)	450 mm
Weight	5100 kg

Counterweight plate	2pieces
Length(L)	3500 mm
Width (W)	1000 mm
Height (H)	450 mm
Weight	4500 kg

TRANSPORT DIMENSIONS AND WEIGHTS

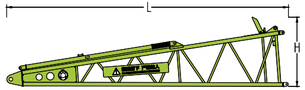

Main boom pivot section	1piece*
Length (L)	6670 mm
Width (W)	1470 mm
Height (H)	1640 mm
Weight	930 kg

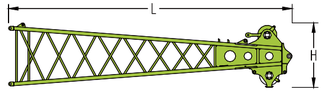

Main boom head	1piece
Length (L)	7130 mm
Width (W)	1430 mm
Height (H)	1630 mm
Weight	830 kg

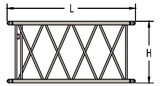

Main boom intermediate section of 3m	2pieces*
Length (L)	3080 mm
Width (W)	1430 mm
Height (H)	1310 mm
Weight	220 kg

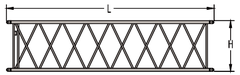

Main boom intermediate section of 6m	1piece*
Length(L)	6080 mm
Width (W)	1430 mm
Height (H)	1310 mm
Weight	351 kg

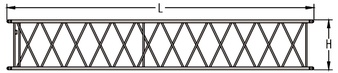

Main boom intermediate section of 9m	3pieces*
Length (L)	9080 mm
Width (W)	1430 mm
Height (H)	1310 mm
Weight	551 kg

TRANSPORT DIMENSIONS AND WEIGHTS

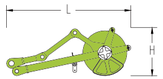

Tip boom	1piece
Length (L)	1370 mm
Width (W)	590 mm
Height (H)	470 mm
Weight	120 kg

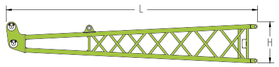

Fixed jib pivot section	1piece*
Length (L)	3640 mm
Width (W)	570 mm
Height (H)	570 mm
Weight	160 kg

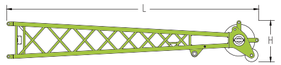

Fixed jib head	1piece*
Length (L)	3820 mm
Width (W)	570 mm
Height (H)	570 mm
Weight	210 kg

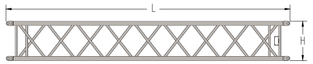

Fixed jib intermediate section of 4m	3pieces*
Length (L)	570 mm
Width (W)	570 mm
Height (H)	120 kg
Weight	

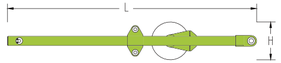

FA-frame	1piece*
Length (L)	3230 mm
Width (W)	730 mm
Height (H)	410 mm
Weight	255 kg

TRANSPORT DIMENSIONS AND WEIGHTS

Load hook of 60T	1 piece*
Length (L)	1500 mm
Width (W)	660 mm
Height (H)	530 mm
Weight	655 kg

Load hook of 40T	1piece*
Length (L)	1340 mm
Width (W)	490 mm
Height (H)	530 mm
Weight	400 kg

Load hook of 20T	1piece*
Length (L)	1180 mm
Width (W)	420 mm
Height (H)	560 mm
Weight	315 kg

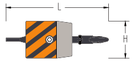

Load hook of 8T	1piece*
Length (L)	830 mm
Width (W)	320 mm
Height (H)	320 mm
Weight	155 kg

Notes:
1.Components are presented in diagrammatic drawings that are not drawn to scale. Length is a boundary dimension.
2.Weight of packaging is not counted in the weight above, which might be different from the actual weight due to manufacturing error.
3.There might be improvements made on components listed above, resulting modifications in dimensions and weight. Actual products to be delivered shall prevail.
4.Numbers of components marked * are determined by the actual need.

TECHNICAL DESCRIPTION

Engine

Engine type----WEICHAI WP6G190E301
Rated power----140kW/2000r/min
Maximum output torque----860N.m/1300r/min
Oil tank capacity------400L
Exhaust emissions: China national 3 emissin standareds

Hydraulic system

Hydraulic pump: The main pump, a plunger pump, drives winches and the traveling mechanism. Dual gear pump is used for slewing and heat dissipation.
Control: pilot proportional control hydraulic system. The motor of hoisting winches is a variable plunger pump. Two cross-shaped hydraulic control levers and a dual foot-operated traveling control valve are used for controlling different executive components.
Hydraulic oil tank: 520L

Hoisting winch

Both the primary and the secondary hoisting winches are driven by an axial hydraulic variable-displacement piston motor through a built-in planetary reducer. Braking of the spring on winch motor is controlled by the balancing valve. The drum with a double-rope groove guarantees that rope of multiple layers will not intertwine together.

Main winch
Line pull----------Max.7T
Rope diameter----------20mm
Rope speed ----------0-145m/min
Rope length----------185m

Aux winch
Line pull----------Max.7T
Rope diameter---------20mm
Rope speed----------0-145m/min
Rope length----------130m

Both hoisting winches with free-fall function is available for an option.

Boom winch

The derricking winch is driven by an axial piston motor through a built-in planetary reducer and brakes through the spring on the motor end.
Cable drum lock: The winch is locked by ratchet wheel and ratchet pawl.Boom winch
Line pull----------Max.71KN
Rope diameter----------20mm
Rope speed ----------0-82m/min
Rope length----------100m

Swing

Slewing mechanism is composed of slewing reducer, motor, normally-closed brake, slewing bearing, etc. The superstructure can be rotated for 360°via the slewing ring which is driven by the pinion gear.
Stepless speed regulation: 0-2.5r/min

LIFTING PERFORMANCE

Lifting height curves of main boom

Unit:m

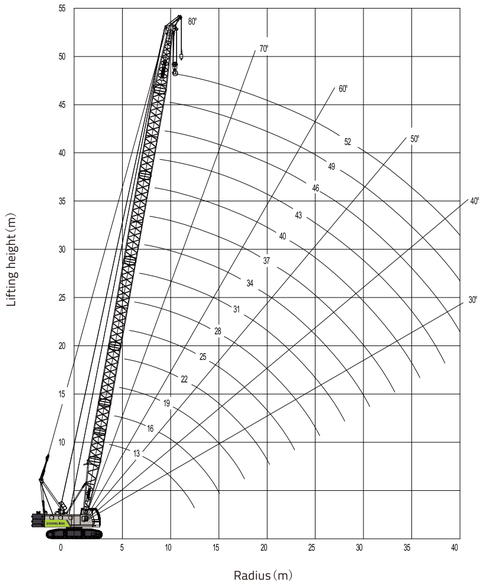

Unit:t

Radius (m)	Main boom length (m)													
	13	16	19	22	25	28	31	34	37	40	43	46	49	52
3.7	60													
4	52.5													
5	40.4	39.1	38.4											
6	31.2	30.9	30.1	29.1	28.3									
7	24.7	24.6	24.5	24.2	23.4									
8	20.4	20.3	20.2	20.1	20	22.9	22.4	18.6	18.2					
9	17.5	17.4	17.3	17	16.9	19.6	19.1	16.2	15.9	15.4	15			
10	15.3	15	14.9	14.8	14.7	16.8	16.5	14.2	13.9	13.7	13.4	12.9	12.6	
11	13.4	13.3	13.2	13.1	13	14.6	14.5	12.6	12.4	12.1	11.9	11.6	11.3	10.8
12	12.1	11.9	11.8	11.6	11.5	12.9	12.8	11.2	11.1	10.8	10.5	10.3	10	9.8
14		9.8	9.5	9.5	9.5	11.4	11.3	9.2	9.2	9.1	8.8	8.6	8.3	8.1
16			8.1	8	8	9.4	9.2	7.7	7.7	7.5	7.5	7.2	7	6.9
18				6.9	6.8	7.8	7.8	6.5	6.5	6.4	6.2	6.2	6	5.7
20				6	5.9	6.7	6.7	5.6	5.6	5.4	5.4	5.3	5.1	4.9
22					5.1	5.8	5.7	4.9	4.8	4.7	4.6	4.5	4.4	4.3
24						5.1	5	4.3	4.2	4.1	4	3.9	3.8	3.8
26						4.4	4.4	3.8	3.8	3.6	3.5	3.5	3.3	3.3
28							3.9	3.4	3.3	3.3	3.2	3	3	2.9
30							3.5	3	3	2.9	2.7	2.7	2.6	2.5
32									2.7	2.6	2.5	2.4	2.3	2.2
34										2.3	2.2	2.1	2	1.9
36											2	1.8	1.8	1.6
38											1.7	1.6	1.5	1.4
40												1.4	1.3	1.2
42													1.2	1

LIFTING PERFORMANCE

Main boom with fixed jib configuration

Lifting height curves on SF-1 boom (Fixed jib angle=10°)

Unit:m

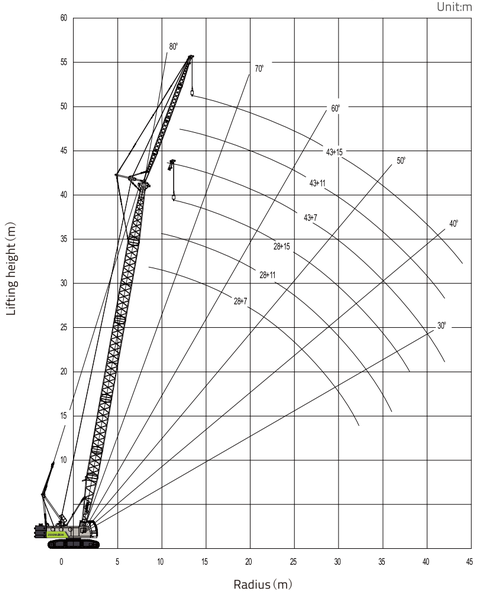

Lifting height curves on SF-1 boom(Fixed jib angle=30°)

Unit:m

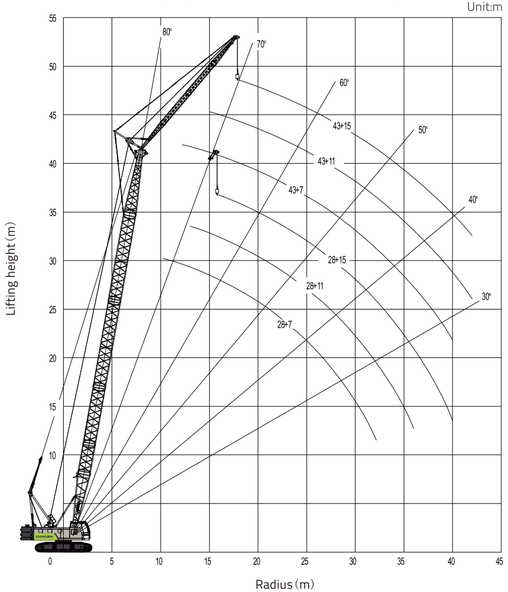

LIFTING PERFORMANCE

Lifting capacity (SF-1 1/3)

Unit:t

Main boom length	28m						31m					
Jib length	7m		11 m		15 m		7m		11m		15m	
Angle	10°	30°	10°	30°	10°	30°	10°	30°	10°	30°	10°	30°
9	12						12					
10	12		12				12					
11	12	12	12				12		7			
12	10.9	11.2	11		7		10.8	11.1	7		7	
14	8.8	9	8.9	8.4	7		8.8	9	7	7	7	
16	7.4	7.5	7.5	7.7	7	6.4	7.3	7.5	7	7	7	
18	6.3	6.4	6.3	6.6	6.4	6.1	6.2	6.3	6.3	6.5	6.3	6
20	5.4	5.5	5.5	5.7	5.5	5.7	5.3	5.4	5.4	5.6	5.5	5.7
22	4.7	4.8	4.8	4.9	4.8	5	4.6	4.7	4.7	4.9	4.7	5
24	4.1	4.2	4.2	4.3	4.2	4.4	4.1	4.1	4.1	4.3	4.2	4.4
26	3.7	3.7	3.7	3.8	3.8	3.9	3.6	3.7	3.6	3.8	3.7	3.9
28	3.2	3.3	3.3	3.4	3.4	3.5	3.2	3.2	3.2	3.3	3.3	3.4
30	2.9	2.9	3	3	3	3.1	2.8	2.8	2.9	3	2.9	3.1
32			2.7	2.7	2.7	2.8	2.5	2.6	2.6	2.7	2.6	2.7
34			2.4	2.4	2.4	2.5		2.3	2.3	2.3	2.3	2.4
36					2.2	2.3			2	2.1	2.1	2.2
38					1.9	2				1.8	1.8	1.9
40											1.7	1.7
42												1.5

LIFTING PERFORMANCE

Lifting capacity (SF-1，2/3)

Unit:t

Main boom length	34m						37m					
Jib length	7m		11 m		15 m		7m		11m		15m	
Angle	10°	30°	10°	30°	10°	30°	10°	30°	10°	30°	10°	30°
10	12						7					
11	11.9		7				7					
12	10.7	11.1	7				7		7			
14	8.7	8.9	7		7		7	7	7		7	
16	7.2	7.4	7	7	7		7	7	7	7	7	
18	6.1	6.3	6.2	6.5	6.2	6	6	6.2	6.1	6.4	6.2	5.9
20	5.2	5.4	5.3	5.5	5.4	5.7	5.2	5.3	5.2	5.5	5.3	5.6
22	4.5	4.7	4.6	4.8	4.7	4.9	4.5	4.6	4.5	4.7	4.6	4.9
24	4	4.1	4	4.2	4.1	4.3	3.9	4	4	4.1	4	4.3
26	3.5	3.6	3.6	3.7	3.6	3.8	3.4	3.5	3.5	3.6	3.5	3.8
28	3.1	3.2	3.2	3.3	3.2	3.4	3	3.1	3.1	3.2	3.1	3.3
30	2.7	2.8	2.8	2.9	2.8	3	2.7	2.7	2.7	2.8	2.8	2.9
32	2.4	2.4	2.5	2.6	2.5	2.7	2.3	2.4	2.4	2.5	2.4	2.6
34	2.2	2.2	2.2	2.3	2.2	2.3	2	2.1	2.1	2.2	2.2	2.3
36	1.9	1.9	1.9	2	2	2.1	1.8	1.8	1.8	1.9	1.9	2
38			1.7	1.8	1.8	1.8	1.6	1.6	1.6	1.7	1.7	1.8
40			1.5	1.6	1.6	1.7			1.4	1.5	1.4	1.6
42					1.3	1.4			1.2	1.2	1.2	1.3
44						1.2					1.1	1.2
46											0.9	1

LIFTING PERFORMANCE

Lifting capacity (SF-1，3/3)

Unit:t

Main boom length	40m						43m					
Jib length	7m		11 m		15 m		7m		11m		15m	
Angle	10°	30°	10°	30°	10°	30°	10°	30°	10°	30°	10°	30°
11	7						7					
12	7		7				7					
14	7	7	7		7		7	7	7		7	
16	7	7	7	7	7		6.7	7	6.7	7	6.7	
18	6	6.1	6	6.3	6.1	5.9	5.8	6.1	5.8	6.2	5.8	
20	5.1	5.2	5.2	5.4	5.2	5.6	5	5.2	5	5.3	5	5.5
22	4.4	4.5	4.5	4.7	4.5	4.8	4.3	4.5	4.3	4.6	4.3	4.7
24	3.8	3.9	3.9	4.1	3.9	4.2	3.7	3.9	3.8	4	3.8	4.2
26	3.3	3.4	3.4	3.6	3.5	3.7	3.2	3.4	3.3	3.5	3.3	3.6
28	2.9	3	3	3.2	3	3.2	2.8	2.9	2.8	3.1	2.9	3.2
30	2.6	2.6	2.6	2.8	2.7	2.9	2.4	2.6	2.5	2.7	2.6	2.8
32	2.3	2.3	2.3	2.4	2.3	2.5	2.1	2.2	2.2	2.3	2.3	2.4
34	1.9	2	2	2.1	2	2.2	1.8	1.9	1.9	2	1.9	2.2
36	1.7	1.8	1.8	1.8	1.8	1.9	1.6	1.7	1.7	1.8	1.7	1.8
38	1.5	1.5	1.5	1.6	1.6	1.7	1.3	1.4	1.4	1.5	1.4	1.6
40	1.3	1.3	1.3	1.4	1.3	1.5	1.2	1.2	1.2	1.3	1.2	1.4
42		1.1	1.1	1.2	1.2	1.3	1	1	1	1.1	1.1	1.2
44			1	1	1	1.1	0.8	0.8	0.9	0.9	0.9	1
46				0.8	0.9	0.9				0.8	0.8	0.8

ZOOMLION

Zoomlion Heavy Industry Science & Technology Co.,Ltd.
Add: No.677, Lugu Road, Zoomlion Industrial Park, Changsha, Hunan, China, 410205

website:en.zoomlion.com 2021.08.05

60 ton capacity
ZCT600V532

ZOOMLION

40 PRODUCTS

VISION CREATES FUTURE

ZOOMLION

CONTENTS

DIMENSIONS

Basic machine with undercarriage

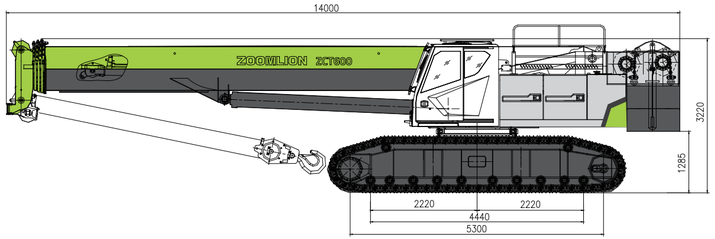

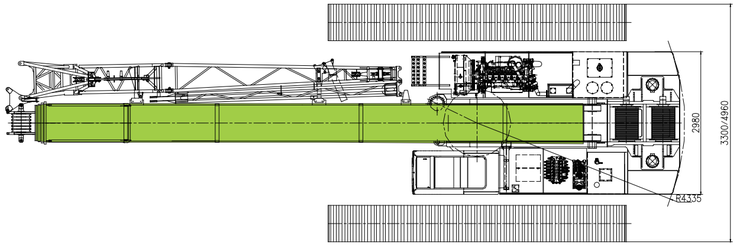

TECHNICAL FEATURE

1.Mature design
· The strongest lifting performance, high reliability, cost advantage, intelligent control.

2.Strong lifting capacity
· The industry's longest five 46m U shape boom; The maximum lifting torque is 2205knm, and the maximum lifting load of full boom is 11T, which is the highest in the industry; The comprehensive lifting performance is higher than that of domestic competitive products.

3.High operation efficiency
· Convenient transportation, few assembly parts, fast self-assembly of 20t movable counterweight, high efficiency on site.

4.High operation efficiency
· Standard vertical outrigger, powerful driving system, 45% climbing gradeability, suitable for complex hoisting environment, soft, uneven, narrow space and other occasions.

TECHNICAL DESCRIPTION

Engine

Engine type----WEICHAI WP6G210E330
Rated power----154 kW/2200rpm
Maximum output torque----860 N·m/1500rpm
Fuel tank------570L

Hoisting winch

There are main and auxiliary winch mechanisms. The hydraulic motor drives the grooved drum through the planetary gear reducer to realize the lifting and landing of the hook. A brake is installed between the motor and the reducer. The main winch and auxiliary winch can be controlled independently. Built in planetary reducer, compact structure, light weight, high reliability. The anti torsion high-strength hoisting wire rope is adopted, and the specifications of the wire rope show as follows:
Diameter: ϕ17.0mm
Strength grade: 1870N/ mm2
Length: 230m for main hoisting rope and 140m for auxiliary hoisting rope.

Hydraulic system

The series hydraulic system with hydraulic pilot proportional control is adopted, and the planetary reducer is driven by high-speed hydraulic motor to realize the action of the actuator. The system has the characteristics of high efficiency, energy saving, stable compound action, no impact, safety and reliability.
Cooler: a radiator driven by a high-power hydraulic motor, 40kW
Hydraulic oil tank capacity-----770L

Swing

Driven by planetary gear reducer, the axial quantitative plunger hydraulic motor can realize 360 ° full rotation of the turntable. The free sliding function can effectively reduce the lateral tension on the boom.
Slewing bearing
Single-row-roller and four-point-contact slewing bearing, internal gearing
Slewing speed
The maximum slewing speed is 2 rpm.

LIFTING PERFORMANCE

Lifting height curve

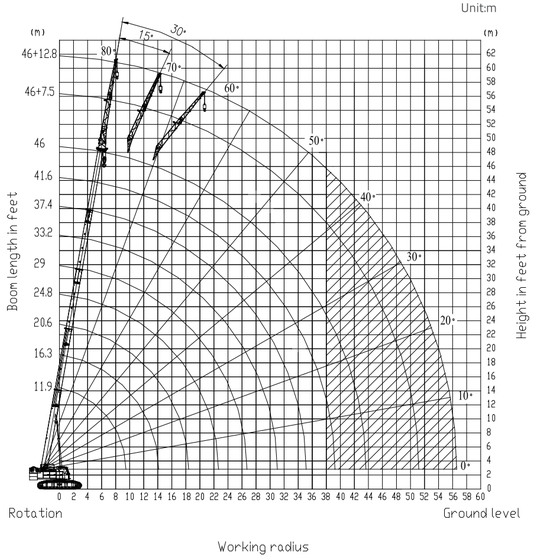

Main Boom Lifting Performance Table

Unit: kg

Working Radius (m)	Main boom (m)								
	I cylinder fully extended, crawler fully extended, 360 ° operation, 20t counterweight, 0°								
	11.9	16.3	20.6	24.8	29	33.2	37.4	41.6	46
3.0	60000	46000							
3.5	54000	46000	38000						
4.0	52000	46000	35000	29000					
4.5	50000	46000	33000	28000	27000				
5.0	44000	43000	31000	27500	27000				
5.5	38000	37000	28000	25500	27000				
6.0	36000	35000	27000	24500	27000	22000			
7.0	27000	26500	24500	22000	24500	20000	19000		
8.0	21000	21000	22000	19500	21500	18000	16800	15000	
9.0		17000	18000	17500	19200	16500	14500	14000	11000
10.0		14500	14500	15500	15600	15000	13600	12800	10800
11.0		11200	11500	11800	12500	13000	12400	11200	10000
12.0		9800	10000	11500	11500	12500	11500	10400	9600
14.0			7800	8400	9000	9600	9800	9000	8600
16.0			5500	6500	7000	7500	7800	8000	7600
18.0				5000	5200	6000	6200	6500	6800
20.0				3800	4100	4800	5000	5000	5600
22.0					3100	3700	4000	4200	4500
24.0						3000	3200	3200	3700
26.0						2400	2600	2600	3000
28.0							2100	2200	2500
30.0							1600	1800	2100
32.0								1400	1800
34.0								1100	1400
36.0									1100
38.0									900
40.0									
I	0	4.4	8.7	8.7	8.7	8.7	8.7	8.7	8.7
II	0	0	0	4.2	8.4	12.6	16.8	21	25.4
Reeving	12	10	8	8	6	6	6	4	4
Hook	60t								

LIFTING PERFORMANCE

Unit: kg

Working Radius (m)	Main boom(m)							
	I cylinder extended to 50%, crawler fully extended, 360 ° operation, 20t counterweight, 0°							
	11.9	16.3	20.5	24.7	28.9	33.1	37.3	41.7
3.0	60000	46000						
3.5	54000	46000	29000					
4.0	52000	46000	29000	27000				
4.5	50000	46000	29000	27000	25000			
5.0	44000	43000	29000	27000	25000			
5.5	38000	37000	29000	27000	25000	20000		
6.0	36000	35000	29000	27000	25000	19500		
7.0	27000	26500	29000	27000	25000	18000	16000	
8.0	21000	21000	23000	23000	24000	16000	15000	11500
9.0		17000	18800	18500	20000	14500	14000	11000
10.0		14500	15500	16000	16500	13500	13000	10500
11.0		11200	13000	14000	14200	12500	12000	10000
12.0		9800	11000	11500	12000	11600	11200	9500
14.0			8500	9000	9200	9500	10000	8800
16.0				7200	7500	7800	8000	7800
18.0				5500	6000	6400	6800	7000
20.0					4800	5200	5500	5600
22.0					4000	4200	4500	4800
24.0						3000	3600	3800
26.0						2600	3000	3200
28.0							2400	2500
30.0							2000	2200
32.0								1800
34.0								1500
36.0								
38.0								
40.0								
I	0	4.4	4.4	4.4	4.4	4.4	4.4	4.4
II	0	0	4.2	8.4	12.6	16.8	21	25.4
Reeving	12	10	8	8	6	6	4	4
Hook	60t							

Unit: kg

Working Radius (m)	Main boom(m)						
	I cylinder extended to 0%, crawler fully extended, 360 ° operation, 20t counterweight, 0°						
	11.9	16.1	20.3	24.5	28.7	32.9	37.3
3.0	60000	29000					
3.5	54000	29000	27000				
4.0	52000	29000	27000	25000			
4.5	50000	29000	27000	25000	20000		
5.0	44000	29000	27000	25000	18500		
5.5	38000	29000	27000	25000	17800	16000	
6.0	36000	29000	27000	24000	16500	15000	
7.0	27000	24000	25000	22000	14500	14500	12000
8.0	21000	20000	21000	20000	13500	13000	12000
9.0		17500	18500	18000	12400	12000	11000
10.0		15000	16000	16000	11800	11000	10000
11.0		12000	13000	14000	11000	10200	9200
12.0			11000	12000	10000	9400	8500
14.0			9000	9800	9000	8400	7600
16.0				8000	7800	7600	6800
18.0				6400	6500	6800	6200
20.0					5200	5500	5600
22.0					4300	4600	4800
24.0						4000	4200
26.0						3200	3500
28.0							3000
30.0							2400
32.0							
34.0							
36.0							
38.0							
40.0							
I	0	0	0	0	0	0	0
II	0	4.2	8.4	12.6	16.8	21	25.4
Reeving	12	10	8	8	6	6	4
Hook	60t						

LIFTING PERFORMANCE

Main Boom + Jib Lifting Performance Table

Unit: kg

Boom angle (°)	Main boom (m) + Jib (m)					
	Side, rear operation, 20t counterweight					
	46+7.5			46+12.8		
	0°	15°	30°	0°	15°	30°
80	5000	3300	2500	3000	2000	1500
78	5000	3300	2500	3000	2000	1450
76	4800	3200	2500	2900	1900	1400
74	4500	3100	2500	2700	1800	1350
72	4200	3000	2500	2500	1700	1300
70	3900	2800	2400	2300	1650	1250
68	3600	2700	2300	2100	1600	1250
66	3400	2600	2200	2000	1550	1200
64	3100	2500	2100	1900	1500	1200
62	2700	2400	2000	1800	1450	1150
60	2300	2100	1850	1700	1400	1100
58	2100	1900	1600	1600	1350	1050
56	1800	1600	1500	1350	1250	1000
54	1600	1300	1200	1200	1100	900
52	1300	1100	1000	1000	900	850
50	1100	1000	900	850	800	750
48	900	800	700	700	650	600
46	750	700	600	600		
44	600	550				
42						
Reeving	1					
Hook	5t					

Rated lifting capacity table for on load driving

Unit: kg

Working Radius (m)	Main boom(m)				
	I cylinder fully extended, 20t counterweight, front on load driving (<0.4m/s) , 0-1°				
	11.9	16.3	20.6	24.8	29
3.0	42000	32200			
3.5	37800	32200	26600		
4.0	36400	32200	24500	17400	
4.5	35000	32200	23100	16800	16200
5.0	30800	30100	21700	16500	16200
5.5	26600	25900	19600	15300	16200
6.0	25200	24500	18900	14700	16200
7.0	18900	18600	17200	13200	14700
8.0	14700	14700	15400	11700	12900
9.0		11900	12600	10500	11520
10.0		10200	10200	9300	9360
11.0		7800	8100	7100	7500
12.0		6900	7000	6900	6900
14.0			5500	5000	5400
16.0			3900	3900	4200
18.0				3000	3100
20.0				2300	2500
22.0					1900
24.0					
I	0	4.4	8.7	8.7	8.7
II	0	0	0	4.2	8.4
Reeving	12	10	8	8	6
Hook	60t				

LIFTING PERFORMANCE

Working Radius (m)	Main boom(m)				
	I cylinder extended to 50%, 20t counterweight,front, on load driving (<0.4m/s),0-1°				
	11.9	16.3	20.5	24.7	28.9
3.0	42000	32200			
3.5	37800	32200	20300		
4.0	36400	32200	20300	16200	
4.5	35000	32200	20300	16200	15000
5.0	30800	30100	20300	16200	15000
5.5	26600	25900	20300	16200	15000
6.0	25200	24500	20300	16200	15000
7.0	18900	18600	20300	16200	15000
8.0	14700	14700	16100	13800	14400
9.0		11900	13200	11100	12000
10.0		10200	10900	9600	9900
11.0		7800	9100	8400	8500
12.0		6900	7700	6900	7200
14.0			6000	5400	5500
16.0				4300	4500
18.0				3300	3600
20.0					2900
22.0					2400
24.0					
I	0	4.4	4.4	4.4	4.4
II	0	0	4.2	8.4	12.6
Reeving	12	10	8	8	6
Hook	60t				

Working Radius (m)	Main boom(m)				
	I cylinder extended to 0%, 20t counterweight,front, on load driving (<0.4m/s),0-1°				
	11.9	16.1	20.3	24.5	28.7
3.0	42000	20300			
3.5	37800	20300	18900		
4.0	36400	20300	18900	15000	
4.5	35000	20300	18900	15000	12000
5.0	30800	20300	18900	15000	11100
5.5	26600	20300	18900	15000	10700
6.0	25200	20300	18900	14400	9900
7.0	18900	16800	17500	13200	8700
8.0	14700	14000	14700	12000	8100
9.0		12300	13000	10800	7400
10.0		10500	11200	9600	7100
11.0		8400	9100	8400	6600
12.0			7700	7200	6000
14.0			6300	5900	5400
16.0				4800	4700
18.0				3800	3900
20.0					3100
22.0					2600
24.0					
I	0	0	0	0	0
II	0	4.2	8.4	12.6	16.8
Reeving	12	10	8	8	6
Hook	60t				

MIAN TECHNICAL PARAMETERS

Item		Unit	Value	Remarks
Maximum lifting capacity		t	60	
Maximum lifting moment of basic boom		t×m	225	
Maximum lifting moment of the boom (full extended)		t×m	122	
Main boom length		m	11.9~46	
Jib length		m	7.5~12.8	
Length of Main boom + Jib		m	58.8	
Main Boom angle		°	-2~80	
Jib mounting angle		°	0, 15, 30	
Maximum speed of single rope (main winch)		m/min	135	No load, at the fourth layer
Maximum speed of single rope (auxiliary winch)		m/min	135	No load, at the fourth layer
Boom derricking time		s	50	
Boom extension time		s	120	
Slewing speed		rpm	0~2	
Walking speed		km/h	2.7 (No load) /1.5 (Full load)	
Gradeability			45	
Weight		t	62.5	Basic boom with main hook
Counterweight		t	20	
Dimension (L × W × H)		mm	14000×3300 (4960) ×3220	
Engine	Model		WP6G210E330	WEICHAI
	Rated power / speed	kW/rpm	154/2200	
	Maximum output torque / speed	Nm/rpm	860/1500	
	Emission	/	Non road China standard Ⅲ	

Note:
1. The single rope speed, slewing speed and traveling speed of the winch vary with the load.

CRAWLER BULLDOZER
ZD170G

ZOOMLION

CRAWLER BULLDOZER ZD170G

	Items	ZD170G	ZD170G MGP
Engine	Manufacturer	Weichai	Weichai
	Model	WD10G190E214	WD10G190E214
	Displacement	9.726 L	9.726 L
	Rated Speed	1900 r/min	1900 r/min
	Rated Power	140 kW	140 kW
Undercarriage	Width of Track Shoe	510 mm	950 mm
	Pitch	203.2 mm	203.2 mm
	Track Gauge	1880mm	2300mm
	Length of Track On Ground	2430 mm	2935 mm
	Ground Clearance	400 mm	400 mm
	Number of Track Shoes (per side)	37 piece	42 piece
Working Device	Blade Type	Straight tilt blade	Straight tilt blade
	Width	3454 mm	4177 mm
	Height	1136 mm	988 mm
	Max. Lift of Blade Above Ground	982 mm	1060 mm
	Max. Drop of Blade Below Ground	511 mm	506 mm
	Blade Capacity	4.5 m^3	4.0 m^3
Dimensions and Weight	Operating Weight	16600 kg	18100 kg
	Length (without ripper)	5292 mm	5415 mm
	Length (with multi/single-shank ripper)	6516 mm	\
	Width	3454 mm	4177 mm
	Height (to top of cab)	3157mm	3201 mm

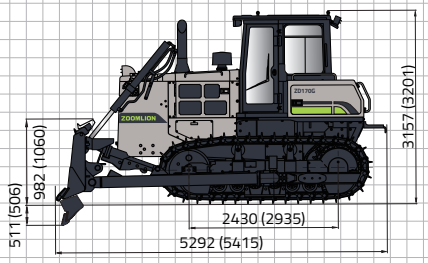

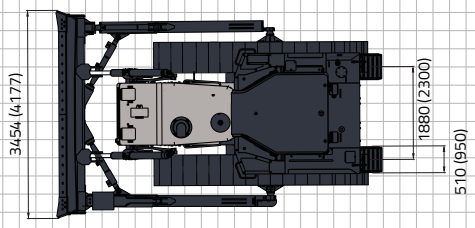

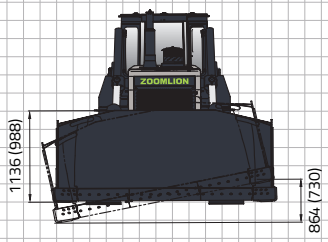

ZOOMLION

Zoomlion Heavy Industry Science & Technology Co.,Ltd.

Add: No.361, South Yinpen Road, Changsha, Hunan Province, P.R.China 410013 Email: earthmoving@zoomlion.com

CRAWLER BULLDOZER
ZD220(S)-3/6

ZOOMLION

CRAWLER BULLDOZE
ZD220(S)-3/6

	Items	Units	ZD220-3/6	ZD220S-3/6
Engine	Manufacturer	/	CUMMINS	CUMMINS
	Model	/	NT855-C280/ NT855-C235	NT855-C280/ QSNT855-C235
	Displacement	L	14	14
	Rated Speed	r/min	1800	1800
	Rated Power	kW	175~187	175~187
	Electric Generator	/	28V、35A	28V、35A
	Fuel Consumption Rate	g/kW·h	≤208	≤208
	Starter Motor	/	24V、11kW	24V、11kW
Undercarriage	Width of Track Shoe	mm	560	910
	Pitch	mm	216	216
	Track Gauge	mm	2000	2250
	Length of Track On Ground	mm	2730	3480
	Ground Clearance	mm	405	510
	Number of Track Shoes (per side)	piece	38	45
Working Device	Blade Type	/	Straight tilt blade	Swamp straight tilt blade
	Width	mm	3725	4365
	Height	mm	1315	1271
	Max. Lift of Blade Above Ground	mm	1210	1300
	Max. Drop of Blade Below Ground	mm	538	550
	Blade Capacity	m^3	6.4	6.8
Dimensions and Weight	Operating Weight	kg	23600	26050
	Length (without ripper)	mm	5460	5590
	Length (with multi/single-shank ripper)	mm	6811/7273	/
	Width	mm	3725	4365
	Height(to top of muffler)	mm	3395	3435

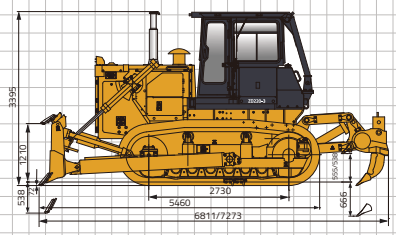

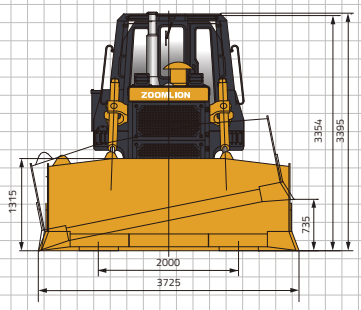

ZOOMLION

Zoomlion Heavy Industry Science & Technology Co.,Ltd.

Add: No.361, South Yinpen Road, Changsha, HunanProvince, P.R.China 410013 **Email: earthmoving@zoomlion.com**

Note: Materials and specifications are subject to change without notice. Featured machines in photos may include additional equipment. See your Zoomlion dealer for available options.

CRAWLER EXCAVATOR

ZE215E

ZOOMLION

CRAWLER EXCAVATOR
ZE215E

	Items	Units	ZE215E	ZE215E ACE
Basic Technical Data	Operating Weight	kg	21500	21680
	Standard Capacity	m³	1.0	1.0
	Slewing Speed	r/min	11.5	11.5
	Traveling Speed(high/low)	km/h	5.5/3.3	5.5/3.3
	Max. Drawbar Pull	kN	192	192
	Digging Force of Bucket	kN	157	157
	Digging Force of Stick	kN	110	110
Engine	Engine Manufacturer	-	CUMMINS	ISUZU
	Engine Model	-	6BTAA5.9	CC-6BG1TRP
	Rated Power	kW/rpm	112/1950	128.5/2100
	Displacement	L	5.9	6.49
	Emission Standard	-	EU Stage II	EU Stage II
Dimensions	Length	mm	9555	9555
	Width	mm	2800	2800
	Height	mm	3085	3085
	Tail Slewing Radius	mm	2840	2840
	Track Gauge	mm	2200	2200
	Length of Track On Ground	mm	3380	3380
Operating Range	Max. Digging Radius	mm	9830	9830
	Max. Digging Reach	mm	9650	9650
	Max. Digging Depth	mm	6610	6610
	Max. Digging Height	mm	9615	9615
	Max. Dumping Height	mm	6785	6785

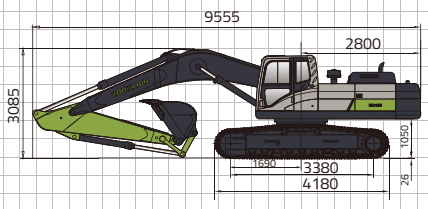

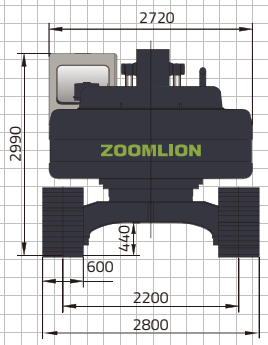

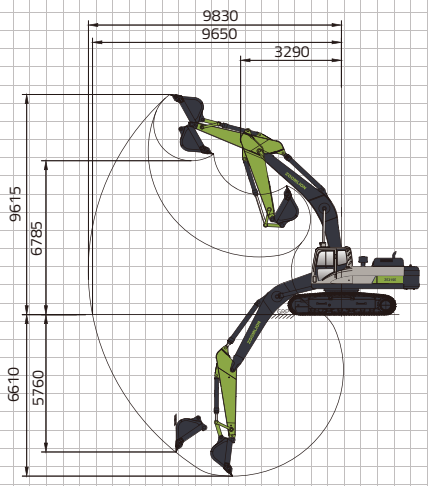

ZOOMLION

Zoomlion Heavy Industry Science & Technology Co.,Ltd.

Add: No.361, South Yinpen Road, Changsha, HunanProvince, P.R.China 410013 Email: earthmoving@zoomlion.com

Note: Materials and specifications are subject to change without notice. Featured machines in photos may include additional equipment. See your Zoomlion dealer for available options.

CRAWLER EXCAVATOR
ZE370E

ZOOMLION

CRAWLER EXCAVATOR ZE370E

	Items	Units	ZE370E	ZE370E-10
Basic Technical Data	Operating Weight	kg	34600	36800
	Standard Capacity	m³	1.65	1.65
	Slewing Speed	r/min	10.4	9.7
	Traveling Speed(high/low)	km/h	5.5/3.3	4.9/2.9
	Max. Drawbar Pull	kN	264	312
	Digging Force of Bucket	kN	219	229
	Digging Force of Stick	kN	171	169
Engine	Engine Manufacturer	-	CUMMINS	CUMMINS
	Engine Model	-	6LTAA8.9	QSL9
	Rated Power	kW/rpm	241/2000	214/2100
	Displacement	L	8.9	8.9
	Emission Standard	-	EU Stage II	EU Stage IIIA
Dimensions	Length	mm	11268	11265
	Width	mm	3190	3190
	Height	mm	3500	3425
	Tail Slewing Radius	mm	3474	3522
	Track Gauge	mm	2590	2590
	Length of Track On Ground	mm	4140	4140
Operating Range	Max. Digging Radius	mm	11075	11175
	Max. Digging Reach	mm	10888	10990
	Max. Digging Depth	mm	7380	7480
	Max. Digging Height	mm	10170	10035
	Max. Dumping Height	mm	7110	6940

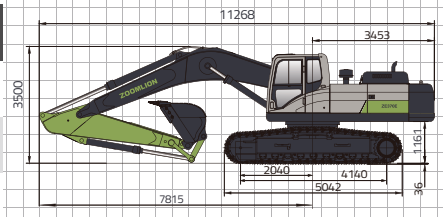

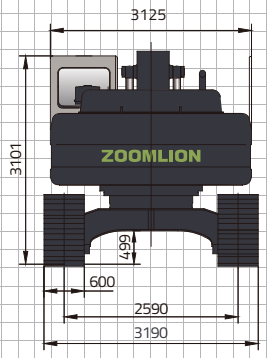

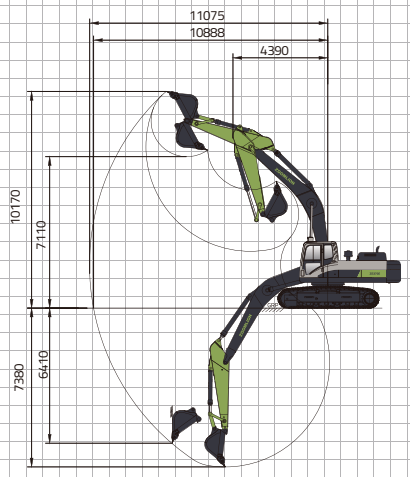

ZOOMLION

Zoomlion Heavy Industry Science & Technology Co.,Ltd.

Add: No.361, South Yinpen Road, Changsha, HunanProvince, P.R.China 410013 Email: earthmoving@zoomlion.com

Note: Materials and specifications are subject to change without notice. Featured machines in photos may include additional equipment. See your Zoomlion dealer for available options.

CRAWLER EXCAVATOR
ZE550G

ZOOMLION

CRAWLER EXCAVATOR
ZE550G

	Items	ZE550G
Basic Technical Data	Operating Weight	53500 kg
	Standard bucket capacity (Range)	HD 3.2 m³ (2.85 m³ - 4.0 m³)
	Slewing Speed	8.4 r/min
	Traveling Speed(high/low)	5.2/3.2 km/h
	Max. Drawbar Pull	443 kN
	Digging Force of Bucket	329 kN
	Digging Force of Stick	271 kN
Engine	Engine Manufacturer	Cummins
	Engine Model	X12S3A375
	Rated Power	277 kW / 2100 rpm
	Displacement	11.8 L
	Emission Standard	EU Stage IIIA
Dimensions	Length	11790 mm
	Width	3610 mm
	Height	3990 mm
	Boom Length	6500 mm
	Stick Length	3000 mm
	Tail Slewing Radius	3887 mm
	Track Gauge	2750 mm
	Length of Track on Ground	4400 mm
Operating Range	Max. Digging Radius	10982 mm
	Max. Digging at Ground Level	10740 mm
	Max. Digging Depth	6945 mm
	Max. Digging Height	9686 mm
	Max. Dumping Height	6644 mm

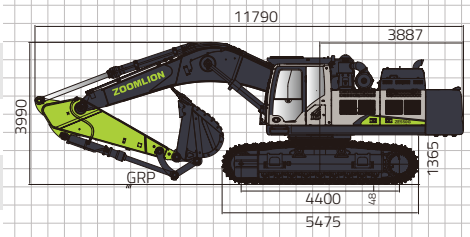

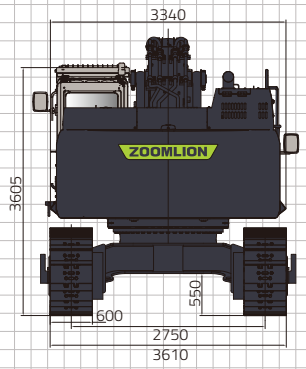

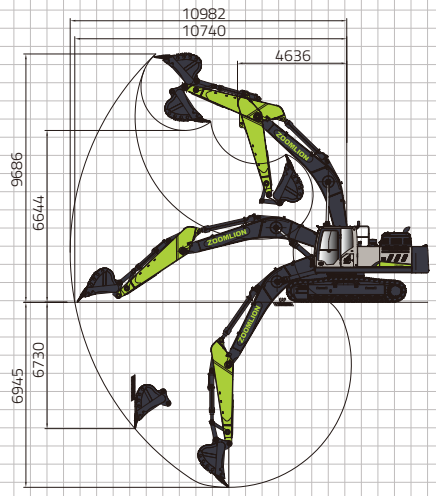

ZOOMLION

Zoomlion Heavy Industry Science & Technology Co.,Ltd.

Add: No.361, South Yinpen Road, Changsha, HunanProvince, P.R.China 410013 Email: earthmoving@zoomlion.com

ZOOMLION ROTARY DRILLING RIG

ZR140

ZOOMLION

ZR140 Rotary Drilling Rig

1. The whole machine can be **transported with Kelly bar** to realize quick transfer between operation and transportation.

2. **Cummins engine** with reliable performance and strong out put power.

3. High construction **efficiency**, thanks to adoption of large displacement main pump and optimizing power system.

4. **Less fuel consumption**, thanks to adoption of a new generation of electronic control platform and proportional control hydraulic system.

5. The auxiliary winch can **handle Dia. 0.8m steel cage** (with a Kelly bar).

6. Automatic **multi-self-checking**, safety and performance monitoring.

7. **Option:** Spin-of.

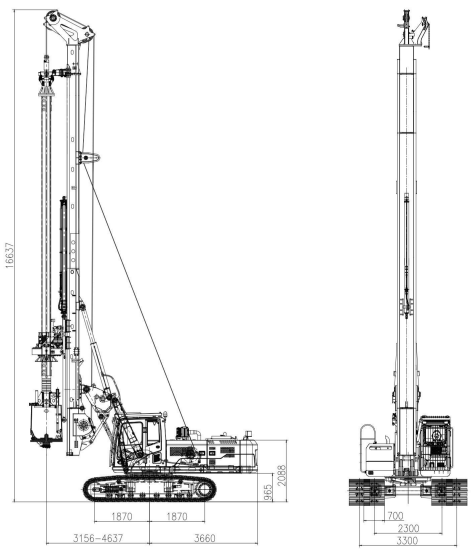

*Note: 3156-3500mm for drilling

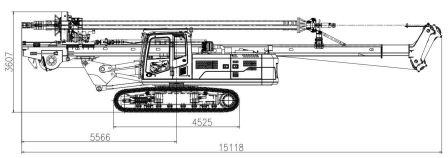

Transport with 10m Kelly bar

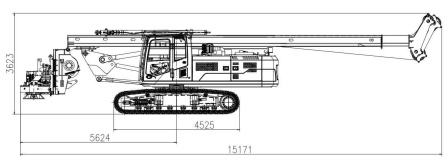

Main Specification	Unit	Value	Note
Drilling			
Max. drilling diameter	mm	1300	
Max. drilling depth	m	44/35	friction/inter-lock
		35/28	optional
Rotary drive			
Max. output torque	kN.m	140	
Rotary speed range	rpm	6～33	
Crowd system			
Crowd method		Cylinder	
Crowd force push	kN	120	
Crowd force pull	kN	130	
Max. stroke of crowd	mm	3500	
Main winch			
Drum structure type		Double layers	
Max. line pull	kN	140	
Max. speed of line	m/min	80	
Diameter of wire rope	mm	22	
Aux. winch			
Max. line pull	kN	50	
Max. speed of line	m/min	70	
Diameter of wire rope	mm	18	
Inclination angle of mast			
Forward/backward	°	5/90	
Left/right	°	±5	
Engine			
Model		Cummins QSB5.9-C160	
Rated power of engine	kW	119	
Emission standard		Stage III	
Displacement of engine	L	5.9	
Undercarriage			
Distance of tracks	mm	3000~4000	(min.~max.)
Width of track shoe	mm	700	
Slewing radius (rear)	mm	3660	
Overall main machine			
Operation weight	t	40	
Max. traction force	kN	250	
Max. travelling speed	km/h	2.2	
Overall height	m	16.7/(14.7)	
Transport with Kelly bar		Yes	
Transport height	mm	3587	with Kelly bar

Kelly bar types available

Types	Drilling depth（m)	Note
Friction Φ355 - 5× 10m	44	
Inter-locking Φ355 - 4× 10m	35	
Friction Φ355 - 5× 8m	35	optional
Inter-locking Φ355 - 4× 8m	28	optional

ZOOMLION

Add: Zoomlion Park, No.297 Bing Fen Rd, Song Jiang District, Shanghai, China.
Service hotline: +86 400-800-0157

ZOOMLION
ROTARY DRILLING RIG

ZR160L

ZOOMLION

ZR160L Rotary Drilling Rig

1. The whole machine can be **transported with Kelly bar** to realize quick transfer between operation and transportation.

2. Only **one trailer** for transportation the whole machine, each time the transportation cost is saved by 30%.

3. High construction **efficiency** thanks to big flow main pump, multi-gear rotary drive, and two-speed crowd cylinder.

4. More **stable** structure and stronger bearing capacity thanks to enhanced mast section, lower center of gravity, large slewing support, and reinforced chassis .

5. **New generation cab** with better vision, more comfortable operation, new electrical control panel. 360 degree full view monitoring.

6. **Options**: Remote control, auto-lubrication, spin-off.

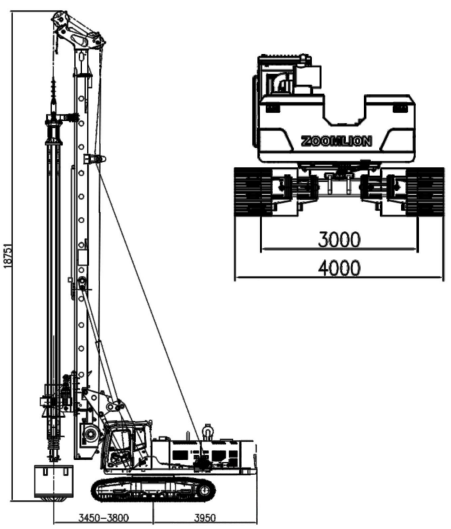

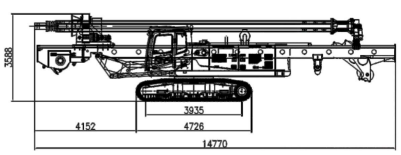

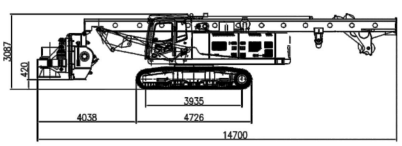

Main Specification	Unit	Value	Note
Drilling			
Max. drilling diameter	mm	1500	
Max. drilling depth	m	56/44	friction/inter-lock
Rotary drive			
Max. output torque	kN.m	160	
Rotary speed range	rpm	5～35	
Crowd system			
Crowd method		Cylinder	
Crowd force push	kN	160	
Crowd force pull	kN	160	
Max. stroke of crowd	mm	4500	
Main winch			
Drum structure type		Double layers	
Max. line pull	kN	160	
Max. speed of line	m/min	82	
Diameter of wire rope	mm	26	
Aux. winch			
Max. line pull	kN	60	
Max. speed of line	m/min	80	
Diameter of wire rope	mm	18	
Inclination angle of mast			
Forward/backward	°	5/90	
Left/right	°	±3.5	
Engine			
Model		Cummins QSB5.9	
Rated power of engine	kW	154	
Emission standard		Stage III	
Displacement of engine	L	5.9	
Undercarriage			
Distance of tracks	mm	3000~4000	(min.~max.)
Width of track shoe	mm	700	
Slewing radius (rear)	mm	3950	
Overall main machine			
Operation weight	t	50	
Max. traction force	kN	330	
Max. travelling speed	km/h	2.1	
Overall height	m	18.8	
Transport with Kelly bar		Yes	
Transport height	mm	3588	(with Kelly bar)

Kelly bar types available

Types	Drilling depth(m)	Note
Friction Φ377 - 5×12m	56	
Inter-locking Φ377 - 4×12m	44	

ZOOMLION

Add: Zoomlion Park, No.297 Bin Fen Rd, Song Jiang District, Shanghai, China.

*Note: Specifications are subject to change without prior notice in accordance with our continuous technical innovations. (V20-12)

ZOOMLION

Zoomlion Heavy Industry Science & Technology Co.,Ltd.
Add: No.677, Lugu Road, Zoomlion Industrial Park, Changsha, Hunan, China, 410205

website:en.zoomlion.com 2023.09.13

ZOOMLION TRUCK CRANE
ZTC250V531-2R

ZOOMLION

4.0 PRODUCTS

CONTENTS

DIMENSION

Operation condition

Unit: mm

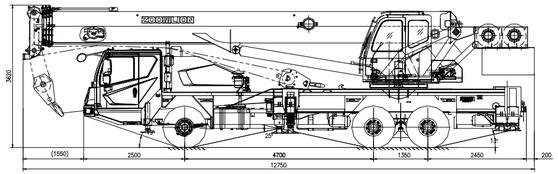

Overall dimensions during deriving status

OM COMBINATIONS

Working Condition	Boom/Jib Length
Main boom	Main boom 10.5m-41m
Main boom + Jib	Main boom 41m + Jib 8m

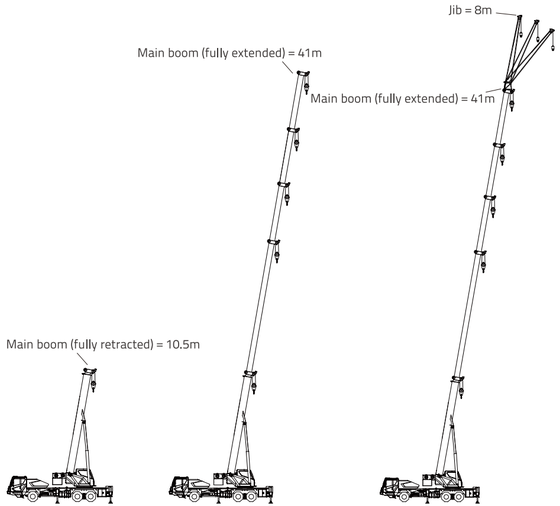

CRANE AND COMPONENT WEIGHTS

Axle	1	2	3	Total weight
T	6.35	12.425	12.425	31.2

Hook (transported individually)

Hook Load T	No. of Sheaves	No. of Lines	Weight Kg	Remark
25t	4	8	260	standard
3t	/	1	60	standard

Working Speed

	km/h MAX.		
12R22.5/11.00R20	85	43	9/1

Drive	Operation Speed	Rope diameter/length	Max. single line pull
1	120m/min	ϕ 17.0mm/175 m	4400kg
2	120m/min	φ17.0mm/105 m	4400kg
360	0～2.8r/min		
	33s / 80s		
	75s / 80s		

LIFTING HEIGHT CHART

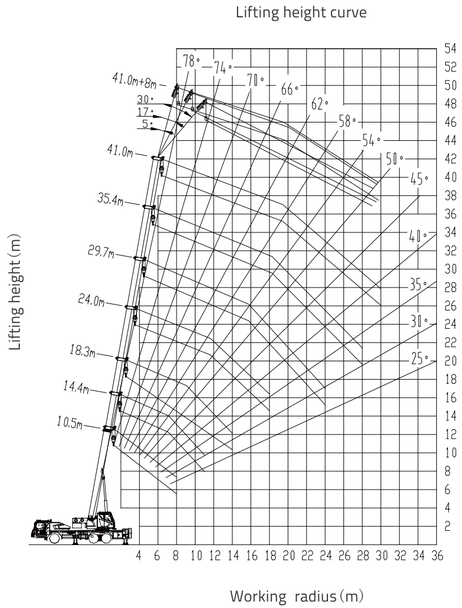

LIFTING CAPACITY TABLES

Unit: kg

Working radius (m)	Boom length (m)						
	Telescopic cylinder I fully extended, outriggers fully extended, over side or rear working area						
	10.5	14.4	18.3	24	29.7	35.4	41
3	25000	25000					
3.5	25000	25000	19500				
4	24800	24200	19500				
4.5	23200	22600	19500	17600			
5	22400	20900	19500	17600			
5.5	20100	19400	18500	17600	13500		
6	18400	18000	17200	16700	13500		
6.5	17000	16800	16000	15800	13500		
7	15600	15200	14700	14800	13050	10000	
7.5	14200	13900	13700	13900	12450	10000	
8	13300	12800	12500	13100	11800	9900	
9		11000	11000	11300	10650	9100	6800
10		9050	8850	9650	9650	8300	6800
11		7400	7250	8000	8500	7500	6600
12		6150	6000	6750	7200	6900	6150
13			5000	5750	6200	6400	5750
14			4200	4900	5350	5700	5350
15				4200	4650	4950	4950
16				3650	4050	4350	4600
18				2700	3100	3450	3650
20				2000	2400	2700	2900
22					1850	2150	2300
24					1400	1650	1850
26						1250	1450
28						950	1150
30							850
32							650
I	0	3.9	7.8	7.8	7.8	7.8	7.8
II	0	0	0	5.7	11.4	17.0	22.7
Reeving	8	8	6	5	4	3	3
Hook	25t						

The value in Column I refers to the extended length of Cylinder I under corresponding boom operating mode, while the value in Column II refers to 3 times of the extended length of Cylinder II.

Unit: kg

Working radius (m)	Boom length (m)					
	Telescopic cylinder I intermediately extended, outriggers fully extended, over sideor rear working area					
	10.5	14.4	20.1	25.8	31.5	37.1
3	25000	25000				
3.5	25000	25000				
4	24800	24200	17600			
4.5	23200	22600	17600			
5	22400	20900	17600	16000		
5.5	20100	19400	17600	16000		
6	18400	18000	17600	16000		
6.5	17000	16300	16600	16000	10400	
7	15600	15200	15300	15200	10400	
7.5	14200	13900	14400	14300	10400	7500
8	13300	12800	13500	13500	10000	7500
9		11000	12000	12100	9400	7500
10		9050	9950	10450	8600	7100
11		7400	8300	8800	7900	6550
12		6150	7000	7500	7300	6050
13			6000	6450	6750	5600
14			5100	5600	5900	5200
15			4450	4900	5200	4900
16			3850	4300	4600	4600
18				3350	3650	3850
20				2650	2900	3100
22				2050	2350	2500
24					1850	2050
26					1500	1650
28						1350
30						1050
32						800
I	0	3.9	3.9	3.9	3.9	3.9
II	0	0	5.7	11.4	17.0	22.7
Reeving	8	8	5	4	3	3
Hook	25t					

LIFTING CAPACITY TABLES

Unit: kg

Working radius (m)	Boom length (m)				
	Telescopic cylinder I fully retracted, outriggers fully extended, over side or rear working area				
	10.5	16.2	21.9	27.6	33.2
3	25000	17600			
3.5	25000	17600			
4	24800	17600	16000		
4.5	23200	17600	16000		
5	22400	17600	16000	11500	
5.5	20100	17600	16000	11500	
6	18400	17600	16000	11500	
6.5	17000	17600	16000	11200	7800
7	15600	16300	16000	10650	7800
7.5	14200	14900	15000	10100	7800
8	13300	13800	14300	9600	7800
9		12100	12400	8650	7350
10		10400	10900	7900	6700
11		8750	9200	7300	6150
12		7450	7900	6700	5650
13		6400	6850	6250	5250
14			6000	5800	4850
15			5250	5450	4550
16			4650	4900	4250
18			3700	3950	3750
20				3200	3350
22				2650	2800
24					2300
26					1950
28					1600
I	0	0	0	0	0
II	0	5.7	11.4	17.0	22.7
Reeving	8	6	5	4	3
Hook	25t				

Unit: kg

Boom angle (°)	Boom (m) + jib (m)		
	Outriggers fully extended		
	41.0+8		
	5°	17°	30°
	Over side or rear working area	Over side or rear working area	Over side or rear working area
80	3000	2200	1600
78	2900	2150	1600
76	2800	2100	1500
74	2650	2000	1450
72	2450	1850	1400
70	2250	1750	1350
68	2100	1600	1300
66	1950	1500	1250
64	1750	1500	1200
62	1500	1300	1150
60	1300	1150	1000
58	1050	950	850
56	900	850	750
54	750	650	600
Reeving	1		
Hook	3t		

TECHNICAL SPECIFICATIONS

superstructure

Boom and telescoping mechanism	The boom has five box-type telescoping sections of U-shape profile and superior bending resistance. The boom body is fabricated from low-alloy and high-strength steel.
Jib	The one-section lattice jib is folded on one side of the boom when it is not used and can be installed and removed by inserted pins. Offset: 5°, 17° or 30°.
Slewing platform	The profile-structured slewing platform which has been optimized through designs.
Rooster sheave	It is secured at one side of the boom head when not being used. It can be rotated around the shaft and pinned onto the boom head when it is used.
Derricking mechanism	Single front-mounted hydraulic cylinder installed with a balance valve provides the boom with smooth derricking movements within the range of -2° to 80°.
Slewing mechanism	Via the planetary gear reducer, the axial plunger hydraulic motor drives the pinion gear on the output shaft to rotate the toothed ring of the slewing bearing fixed on the chassis frame, providing a 360° unlimited slewing range.
Hoist mechanism	It consists of a main hoisting winch and an auxiliary hoisting winch. A brake is fitted between the motor and reducer. The main winch and auxiliary winch can work independently or simultaneously.
Main and auxiliary hooks	Main hook: rotatable, 25 t, with 4 pulleys, a mounting lug at rope end and a hook safety device. Auxiliary hook (1 reeving): rotatable, 3 t, with a hook safety device.
Operator's cab	The operator's cab is a welded steel-structure with spacious vision. AC and Heater.
Outriggers	H-type outriggers in box structure are welded by low-alloy and high-strength steel. The 5th outrigger is installed beneath the driver's cab. When the 5th outrigger is set up, the crane can operate at 360 degree range.crane can operate at 360 degree range.
Hydraulic system	The open-type hydraulic system adopts classic traditional 5-lever manual operation and a proportional control system. It separately controls the movements of slewing, telescoping, derricking and hoisting. Hydraulic tank:546L.
Electrical system	Double-wired system, 24 Volt DC.
Safety devices	Automatic load moment limiter, warning light, digital LCD, Hoisting limit switch, Balance valve.

Crane Carrier

Engine	YCS06270-30 Rated power: 199/2300 kW/r/min; Max. output torque: 1050/1700 m/r/min Fuel tank: 250L.
Limits for exhaust pollutants and smoke	Chinese National Stage III.

MAIN TECHNICAL PARAMETERS

Item			Value	Remarks
Working performance	Max. rated lifting capacity	kg	25000	
	Max. load moment of basic boom	kN.m	1098	
	Max. load moment of Max. length boom	kN.m	734	
	Max. lifting height of basic boom	m	10.3	
	Max. lifting height of boom	m	41.3	
	Max. lifting height of jib	m	48.9	These parameters do not include deflection of boom and jib
Working speeds	Max. hoist rope speed (Main winch)	m/min	120	At 4th layer
	Max. hoist rope speed (Auxiliary winch)	m/min	120	At 4th layer
	Boom derricking up /down time	s	33/80	
	Boom telescoping out/in time	s	75/80	
	Outrigger retraction/extension time (horizontal)	s	20/28	
	Outrigger retraction/extension time (vertical)	s	20/28	
	Slewing speed	r/min	0 - 2.8	
Driving	Max. operation altitude	m	2000	
	Max. driving speed	km/h	85	
	Max. gradeability	%	43	
	Min. turning diameter	m	20.5	
	Approach angle	°	19	
	Departure angle	°	13	
	Min. ground clearance	mm	250	
	Oil consumption per hundred kilometer	L	28	
Mass	Deadweight in driving condition	kg	31200	
	Complete vehicle kerb mass	kg	31070	
	Front axle load	kg	6350	
	Rear axle load	kg	24850	
Dimensions	Overall dimensions (L×W×H)	mm	12750×2550×3620	
	Longitudinal distance between outriggers	m	5.53	
	Transversal distance between outriggers	m	For completely extended outrigger: 6.4 m for intermediately extended outrigger: 4.36 m	
	Tail slewing radius	mm	3420	
	Boom length	m	10.5-41.0	
	Boom angle	°	-2- 80	
	Jib length	m	8	
	Jib angle	°	5、17、30	

ZOOMLION

Zoomlion Heavy Industry Science & Technology Co.,Ltd.
Add: No.677, Lugu Road, Zoomlion Industrial Park, Changsha, Hunan, China, 410205

website:en.zoomlion.com 2023.03.31

ZOOMLION TRUCK CRANE
ZTC550V532-1

CONTENTS

CRANE DIMENSIONS

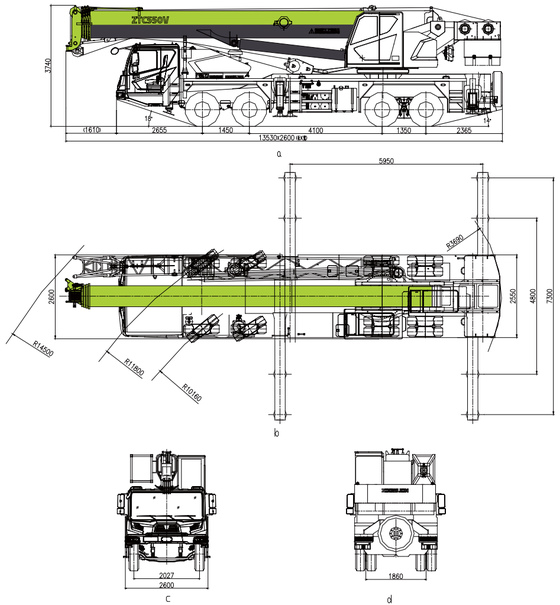

BOOM / JIBS COMBINATION

Working Condition	Boom/Jib Length
Boom	11.2-44m
Boom+Jib section1	Boom 44m+Jib (section1)9.5m
Boom+Jib section1+Jib section2	Boom 44m+Jib (section1+section2)16m

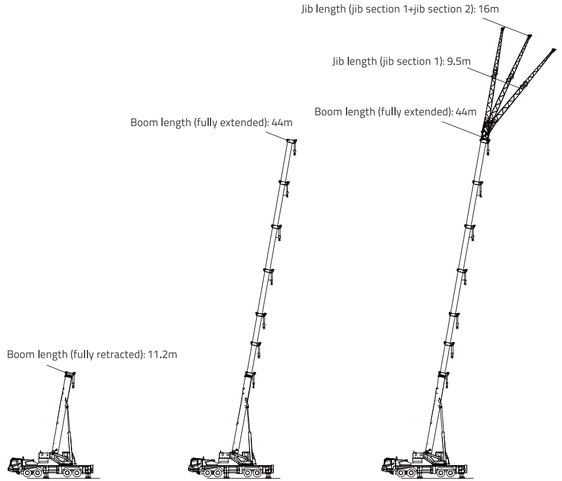

CRANE AND COMPONENT WEIGHTS

Axle	1	2	3	4	Total weight
T	6.5	6.5	13	13	39

Hook Detailed Description

Hook Load T	No. of Sheaves	No. of Lines	Weight Kg	Remark
55	6	11	510	Standard Configuration
4.5	0	1	90	Standard Configuration

Working Speed

	km/h MAX.		
12R22.5 / 11.0R20	85	40	8 / R

Drive	Operation Speed	Rope Diameter/length	Max. Single Line Pull
1	140m/min	Φ17mm/200m	5t
2	140m/min	Φ17mm/130m	5t
360	0～2.3r/min		
	42/100s		
	85/90s		

LIFTING HEIGHT CURVE

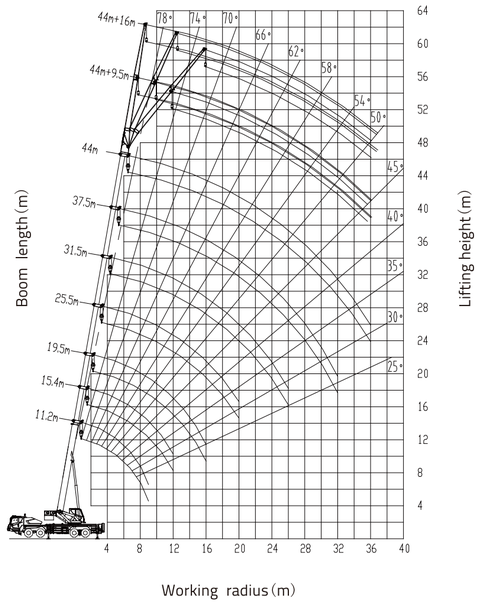

LIFTING CAPACITY TABLES

Unit: kg

Main boom (m)							
Radius (m)	Telescopic cylinder I fully extended, outriggers fully extended, over side or rear working area, with 8 t counterweight						
	11.2	15.4	19.5	25.5	31.5	37.5	44
2.5	55000*						
3.0	50000*	35000					
3.5	35000	34500	28000				
4.0	34500	34000	28000	23000			
4.5	33500	33000	28000	23000			
5.0	32500	32000	27200	23000			
5.5	29600	29000	25500	22000	18000		
6.0	26500	26000	24300	21000	18000		
7.0	22500	22000	21200	19000	16500	13000	
8.0	19000	19000	19000	17000	14800	12200	
9.0	15200	16000	16200	15200	13600	11400	8800
10.0		13600	13400	13800	12300	10600	8300
12.0		9600	9400	10400	10400	9200	7800
14.0			6800	7800	8400	7850	7000
16.0			5000	5950	6500	6800	6350
18.0				4600	5200	5550	5500
20.0				3550	4100	4500	4700
22.0				2700	3300	3650	4000
24.0					2600	3000	3300
26.0					2050	2450	2750
28.0						1950	2250
30.0						1550	1850
32.0						1200	1500
34.0							1200
36.0							900
I(m)	0	4.2	8.3	8.3	8.3	8.3	8.3
II(m)	0	0	0	6	12	18	24.5
Reeving	11	8	7	6	5	3	3
Hook	55t						

Unit: kg

Main boom (m)						
Radius (m)	Telescopic cylinder I intermediately extended, outriggers fully extended, over side or rear working area, with 8 t counterweight					
	11.2	15.4	21.4	27.4	33.4	39.9
2.5	55000*					
3.0	50000*	35000	23000			
3.5	35000	34500	23000			
4.0	34500	34000	23000			
4.5	33500	33000	23000	19000		
5.0	32500	32000	23000	19000		
5.5	29600	29000	23000	19000		
6.0	26500	26000	23000	19000	13200	
7.0	22500	22000	21000	19000	13200	
8.0	19000	19000	19000	18500	12500	9200
9.0	15200	16000	16000	16500	11500	9200
10.0		13600	14500	15000	10600	8500
12.0		9600	10600	11200	9400	7800
14.0			8000	8650	8300	6800
16.0			6200	6800	7100	6100
18.0			4800	5400	5800	5400
20.0				4300	4700	4800
22.0				3500	3850	4100
24.0					3200	3400
26.0					2600	2900
28.0					2150	2400
30.0						2000
32.0						1650
34.0						1350
I(m)	0	4.2	4.2	4.2	4.2	4.2
II(m)	0	0	6	12	18	24.5
Reeving	11	8	6	5	4	3
Hook	55t					

LIFTING CAPACITY TABLES

Unit: kg

Radius (m)	Main boom (m)				
	Telescopic cylinder I fully retracted, outriggers fully extended, over side or rear working area, with 8 t counterweight				
	11.2	17.2	23.2	29.2	35.7
2.5	55000*				
3.0	50000*	23000			
3.5	35000	23000	19000		
4.0	34500	23000	19000		
4.5	33500	23000	19000		
5.0	32500	23000	19000	14000	
5.5	29600	23000	19000	14000	
6.0	26500	23000	19000	13500	
7.0	22500	21500	18000	12500	10000
8.0	19000	19300	16400	11400	9500
9.0	15200	16500	15000	10500	9000
10.0		15000	13800	9800	8500
12.0		11000	11700	8500	7400
14.0		8400	9100	7400	6500
16.0			7200	6600	5700
18.0			5800	6000	5000
20.0			4700	5100	4500
22.0				4200	4000
24.0				3500	3600
26.0					3200
28.0					2700
30.0					2300
I(m)	0	0	0	0	0
II(m)	0	6	12	18	24.5
Reeving	11	6	5	4	3
Hook	55t				

Unit: kg

Radius (m)	Main boom (m)						
	Telescopic cylinder I fully extended, outriggers fully extended, over side or rear working area, with 5.5 t counterweight						
	11.2	15.4	19.5	25.5	31.5	37.5	44
2.5	55000*						
3.0	50000*	35000					
3.5	35000	34500	28000				
4.0	34500	34000	28000	23000			
4.5	33500	33000	28000	23000			
5.0	32000	31500	27200	23000			
5.5	29000	28500	25500	22000	18000		
6.0	26000	26000	24000	21000	18000		
7.0	22000	21500	21000	19000	16500	13000	
8.0	18200	18600	18300	17000	14800	12200	
9.0	14500	14700	14500	15200	13600	11400	8800
10.0		11900	11700	12800	12100	10600	8300
12.0		8200	8100	9000	9700	9200	7800
14.0			5700	6600	7250	7700	7000
16.0			4100	5000	5500	6000	6100
18.0				3700	4300	4700	5000
20.0				2800	3350	3700	4000
22.0					2600	3000	3300
24.0					2000	2350	2700
26.0					1450	1850	2200
28.0						1400	1700
30.0						1000	1300
32.0						750	1000
34.0							750
36.0							
I(m)	0	4.2	8.3	8.3	8.3	8.3	8.3
II(m)	0	0	0	6	12	18	24.5
Reeving	11	8	7	6	5	3	3
Hook	55t						

LIFTING CAPACITY TABLES

Unit: kg

Radius (m)	Main boom (m)					
	Telescopic cylinder I intermediately extended, outriggers fully extended, over side or rear working area, with 5.5 t counterweight					
	11.2	15.4	21.4	27.4	33.4	39.9
2.5	55000*					
3.0	50000*	35000	23000			
3.5	35000	34500	23000			
4.0	34500	34000	23000			
4.5	33500	33000	23000	19000		
5.0	32000	31500	23000	19000		
5.5	29000	28500	23000	19000		
6.0	26000	26000	23000	19000	13200	
7.0	22000	21500	21000	19000	13200	
8.0	18200	18600	19000	18000	12500	9200
9.0	14500	14700	16000	16500	11500	9200
10.0		11900	13200	14000	10600	8500
12.0		8200	9400	10200	9400	7800
14.0			7000	7700	8100	6800
16.0			5300	6000	6400	6000
18.0			4000	4700	5100	5300
20.0				3700	4100	4400
22.0				2900	3300	3600
24.0					2600	2900
26.0					2100	2400
28.0					1700	2000
30.0						1600
32.0						1250
34.0						950
I(m)	0	4.2	4.2	4.2	4.2	4.2
II(m)	0	0	6	12	18	24.5
Reeving	11	8	6	5	4	3
Hook	55t					

Unit: kg

Radius (m)	Main boom (m)				
	Telescopic cylinder I fully retracted, outriggers fully extended, over side or rear working area, with 5.5 t counterweight				
	11.2	17.2	23.2	29.2	35.7
2.5	55000*				
3.0	50000*	23000			
3.5	35000	23000	19000		
4.0	34500	23000	19000		
4.5	33500	23000	19000		
5.0	32500	23000	19000	14000	
5.5	29600	23000	19000	14000	
6.0	26500	23000	19000	13500	
7.0	22500	21500	18000	12500	10000
8.0	19000	19300	16400	11400	9500
9.0	15200	16500	15000	10500	9000
10.0		13700	13800	9800	8500
12.0		9800	10600	8500	7400
14.0		7400	8100	7400	6500
16.0			6300	6600	5700
18.0			5000	5500	5000
20.0				4500	4500
22.0				3700	3900
24.0				3000	3200
26.0					2700
28.0					2300
30.0					1900
32.0					1500
I(m)	0	0	0	0	0
II(m)	0	6	12	18	24.5
Reeving	11	6	5	4	3
Hook	55t				

LIFTING CAPACITY TABLES

Unit: kg

Boom angle (°)	Boom (m) + jib (m)					
	Outriggers fully extended, with 8 t counterweight					
	44+9.5			44+16		
	0°	15°	30°	0°	15°	30°
80	4000	2800	2000	2500	1600	1200
78	3800	2600	1900	2400	1550	1150
76	3500	2450	1800	2200	1450	1100
74	3200	2200	1750	2000	1400	1050
72	2900	2050	1700	1900	1350	1000
70	2600	2000	1600	1750	1250	950
68	2400	1900	1550	1600	1200	950
66	2300	1800	1500	1500	1150	900
64	2200	1700	1400	1400	1100	850
62	2050	1600	1350	1300	1050	850
60	1900	1550	1300	1250	1000	800
58	1700	1450	1250	1150	950	800
56	1500	1350	1200	1050	900	800
54	1300	1200	1100	900	800	750
52	1100	1000	950	750	700	650
50	900	850	800	600	550	500
45	550	500				
Reeving	1					
Hook	4t					

Unit: kg

Boom angle (°)	Boom (m) + jib (m)					
	Outriggers fully extended, with 5.5 t counterweight					
	44+9.5			44+16		
	0°	15°	30°	0°	15°	30°
80	4000	2800	2000	2500	1600	1200
78	3800	2600	1900	2400	1550	1150
76	3500	2450	1800	2200	1450	1100
74	3200	2200	1750	2000	1400	1050
72	2900	2050	1700	1900	1350	1000
70	2600	2000	1600	1750	1250	950
68	2400	1900	1550	1600	1200	950
66	2300	1800	1500	1500	1150	900
64	2200	1700	1400	1400	1100	850
62	2050	1600	1350	1300	1050	850
60	1800	1550	1300	1250	1000	800
58	1550	1450	1250	1150	950	800
56	1300	1200	1150	1000	850	750
54	1100	1000	950	800	700	650
52	900	850	800	650	600	550
50	700	650	600	500	450	400
45	400					
Reeving	1					
Hook	4t					

TECHNICAL SPECIFICATIONS

Crane Superstructure

Main boom	5 section U-shaped single cylinder pinning telescoping boom, made of high-tensile steel plate. Main boom length: 11.2m-44m.
Jib	2 section lattice jibs(9.5m,16m), offset: 0°,15°,30°.
Winch	Main winch and auxiliary winch with variable displacement piston motors and planetary reducers.
Slewing gear	Hydraulic fixed displacement motor, planetary reducer and slewing bearing.
Hydraulic system	Electronic and hydraulic proportional control system with better mirco-position movement and compound movements.
Electrical system	Two-wire system, 24 Volt DC.
Operator's cab	New cab with spacious room and man-machine friendly layout offers a comfortable operating experience. AC and heater.
Safety devices	Automatic load moment limiter,warning light, digital LCD monitor, LMI, limit switch, relief valve, emergency stop button etc.
Counterweight	8T counterweight.

Crane Carrier

Chassis frame	Made by ZOOMLION with high-tensile steel plate.
Outrigger	2 stage H-type outriggers with wide spread 5.95m(W)*7.3m(L).
Engine	WEICHAI WP10.336 diesel engine, output 247KW, max. torque 1300N*m. Fuel tank: 300L.
Transmission	FAST mechanical gear box with 9 forward gears and 1 reverse gears.
Axles	Front steering axles and rear tandem axles are driving axles.
Suspension	Front axle leaf steel spring suspension and rear axle rubber suspension with thrust rod and balanced Beams.
Steering	Front axles steering with power steering assistant system.
Brake	Service brake, parking brake and emergency brake and auxiliary brake.
Tires	Total 12 tires with one spare tire, tire size: 12R22.5/11.00R20.
Driver's cab	Modern and luxury driver's cab with man-machine friendly layout offers a comfortable operating experience. AC and heater.

MAIN TECHNICAL PARAMETERS

Item			Value	Remarks
Working performance	Max. rated lifting capacity	kg	55000	
	Max. load moment of basic boom	kN.m	1595	
	Max. load moment of max. length main boom	kN.m	995.6	
	Max. lifting height of basic boom	m	11.8	
	Max. lifting height of main boom	m	44	These parameters do not include deflection of boom and jib.
	Max. lifting height of jib (optional: 7 m extension)	m	60	
Working speeds	Max. hoist rope speed (main winch)	m/min	140	At 4th layer
	Max. hoist rope speed (auxiliary winch)	m/min	140	At 4th layer
	Boom derricking up time	s	42	
	Boom telescoping out time	s	85	
	Slewing speed	r/min	0 2.3	
Driving	Max. driving speed	km/h	85	
	Max. gradeability	%	40	
	Min. turning diameter	m	less than 24	
	Min. ground clearance	mm	260	
	Oil consumption per hundred kilometers	L	38	
Weight	Deadweight in driving condition	kg	39000	Excluded 2.5 t auxiliary counterweight
	Complete vehicle kerb mass	kg	38870	
	Front axle load	kg	13000	
	Rear axle load	kg	26000	
Dimension	Overall dimensions (L×W×H)	mm	13530×2600×3740	
	Longitudinal distance between outriggers	m	5.95	
	Transversal distance between outriggers	m	Completely extended: 7.3 Intermediately extended: 4.8 m	
	Tail slewing Radius	mm	3690	
	Main boom length	m	11.2 44	
	Boom angle	°	-2 80	
	Jib length	m	9.5 16	
	Offset	°	0 15 30	

ZOOMLION

Zoomlion Heavy Industry Science & Technology Co.,Ltd.
Add: No.677, Lugu Road, Zoomlion Industrial Park, Changsha, Hunan, China, 410205

website:en.zoomlion.com 2023.10.07

ZOOMLION TRUCK CRANE
ZTC800V532-1R

ZOOMLION

4.0 PRODUCTS

CONTENTS

DIMENSION

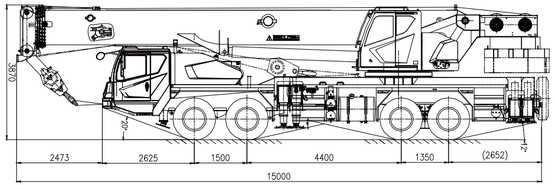

BOOM COMBINATION

Working Condition	Boom/Jib Length
Boom	12.5-49m
Boom +Jibsection1	Boom 49m +(Jib section 1)9.5m
Boom +Jibsection 1 + jib section 2	Boom 49m +(Jib section 1 + jib section 2)16m

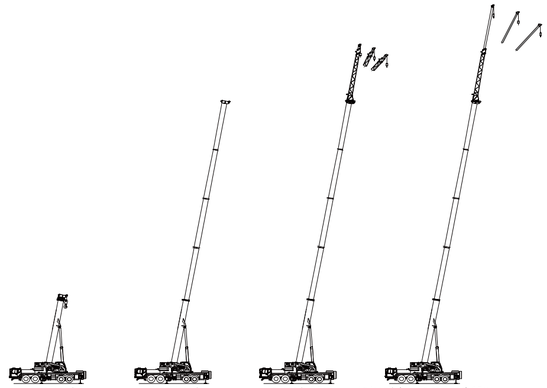

Boom length (fully retracted): 12.5m | Boom length (fully extended): 49m | Jib length: 9.5m | Jib length (two jib sections): 16m

CRANE AND COMPONENT WEIGHTS

Axle	1	2	3	4	Total weight
T	9.5	9.5	13	13	45

Note: without auxiliary counterweight, moveable counterweight

Hook Detailed Description

Hook Load T	No. of Sheaves	Max. reeving	Weight Kg	Remarks
60t	6	12	550	standard
8t	-	1	125	standard
35t	3	6	380	optional

Working Speed

	km/h MAX.	%	
325/95R24	89	48	Forward Gears：12.74/9.43/6.67/4.83 /3.53/ 2.64/1.95/1.38/1.00/ 0.73 Reverse Gear：13.73/2.84

Drive	Operation Speed	Rope Diameter/length	Max. Single Line Pull
1	130m/min	Φ20mm/230m	6500Kg
2	130m/min	Φ20mm/140m	6500Kg
360	0~1.8r/min		
	55/115		
	110/130		

LIFTING HEIGHT CURVE

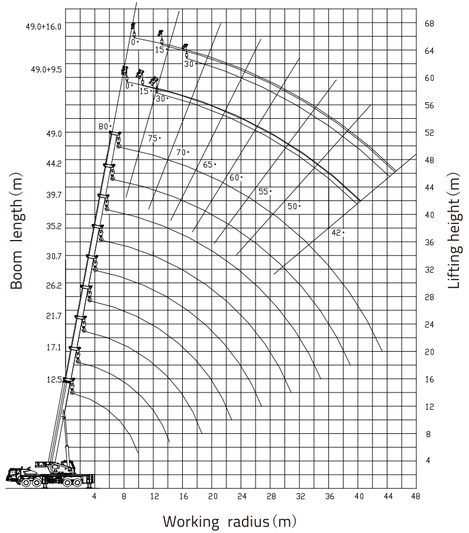

LIFTING CAPACITY TABLES

Rated capacity chart(with boom only)

Unit: t

Working radius (m)	Main boom（m）								
	Telescopic cylinder I and outriggers completely extended, over sides and rear, with 16t counterweight								
	12.5	17.1	21.7	26.2	30.7	35.2	39.7	44.2	49.0
3.0	80.0 *	65.0							
3.5	73.0 *	63.0	42.0						
4.0	66.0 *	61.0	42.0						
4.5	60.0 *	60.5	42.0	32.0					
5.0	56.0	54.0	42.0	32.0					
5.5	52.0	50.5	40.0	32.0	29.0				
6.0	46.0	45.5	39.0	32.0	29.0				
7.0	41.0	40.0	34.0	32.0	29.0	26.0			
8.0	35.5	35.0	29.5	29.0	27.0	26.0	21.0		
9.0	28.5	27.5	26.0	26.0	25.0	22.5	19.7	16.5	
10.0		22.5	22.5	22.5	23.0	20.8	18.2	16.0	12.4
11.0		20.5	20.2	21.0	21.0	19.0	17.0	15.0	12.2
12.0		17.5	17.2	18.2	19.0	17.6	15.8	14.2	12.0
14.0			12.7	13.7	14.3	14.7	13.5	12.5	11.5
16.0			9.7	10.5	11.1	11.6	12.0	11.0	10.4
18.0			7.4	8.2	8.8	9.3	9.7	9.7	9.4
20.0				6.5	7.1	7.6	8.0	8.2	8.3
22.0				5.1	5.7	6.2	6.6	6.9	7.2
24.0					4.6	5.1	5.4	5.7	6.0
26.0					3.7	4.2	4.5	4.8	5.1
28.0						3.4	3.7	4.0	4.3
30.0						2.7	3.0	3.3	3.6
32.0							2.5	2.8	3.0
34.0							2.0	2.3	2.5
36.0								1.9	2.1
38.0								1.5	1.8
40.0									1.4
42.0									1.1
44.0									
I	0	4.6	9.2	9.2	9.2	9.2	9.2	9.2	9.2
II	0	0	0	4.5	9.0	13.5	18.0	22.5	27.3
Reeving	12	10	8	6	5	4	4	3	3
Hook	60t								

Rated capacity chart(with boom only)

Unit: t

Working radius (m)	Main boom（m）							
	Telescopic cylinder I intermediately extended and outriggers completely extended, over sides and rear, with 16 t fixed counterweight							
	12.5	17.1	21.6	26.1	30.6	35.1	39.6	44.4
3.0	80.0 *	65.0	32.0					
3.5	73.0*	63.0	32.0					
4.0	66.0*	61.0	32.0	30.0				
4.5	60.0 *	60.5	32.0	30.0				
5.0	56.0	54.0	32.0	30.0	27.0			
5.5	52.0	50.5	32.0	30.0	27.0			
6.0	46.0	45.5	32.0	30.0	27.0			
7.0	41.0	40.0	32.0	30.0	27.0	22.0		
8.0	35.5	35.0	30.0	30.0	27.0	21.0	16.5	
9.0	28.5	27.5	27.0	27.0	27.0	20.0	16.5	13.5
10.0		22.5	23.5	24.0	24.0	19.0	16.0	13.0
11.0		20.5	21.5	22.0	22.0	17.5	15.0	12.5
12.0		17.5	18.5	19.4	19.9	16.5	14.0	12.0
14.0			14.0	14.8	15.3	14.6	12.3	11.0
16.0			10.9	11.5	12.0	12.4	11.0	9.7
18.0				9.3	9.8	10.0	9.7	8.7
20.0				7.5	8.0	8.3	8.6	7.8
22.0				6.1	6.6	6.9	7.2	7.0
24.0					5.5	5.8	6.1	6.3
26.0					4.5	4.8	5.1	5.3
28.0						4.1	4.4	4.6
30.0						3.4	3.7	3.9
32.0							3.1	3.2
34.0							2.6	2.8
36.0								2.4
38.0								2.0
40.0I								
II	0	4.6	4.6	4.6	4.6	4.6	4.6	4.6
Reeving	0	0	4.5	9.0	13.5	18.0	22.5	27.3
Hook	12	10	6	6	5	4	3	3
	60t							

LIFTING CAPACITY TABLES

Rated capacity chart(with boom only)

Unit: t

Working radius (m)	Main boom（m）						
	Telescopic cylinder I completely retracted and outriggers completely extended, over sides and rear, with 16 t counterweight						
	12.5	17.0	21.5	26.0	30.5	35.0	39.8
3.0	80.0 *	32.0	30.0				
3.5	76.0 *	32.0	30.0				
4.0	68.5 *	32.0	30.0	27.0			
4.5	65.5 *	32.0	30.0	27.0			
5.0	59.0	32.0	30.0	27.0	22.0		
5.5	55.0	32.0	30.0	27.0	22.0		
6.0	46.0	32.0	30.0	27.0	21.0		
7.0	42.0	32.0	30.0	27.0	20.0	16.5	
8.0	35.5	31.0	30.0	27.0	19.0	16.5	14.0
9.0	28.5	27.0	27.0	26.0	18.0	16.0	13.5
10.0		24.0	24.0	24.0	16.5	15.0	13.0
11.0		22.0	22.0	22.0	15.2	14.0	12.5
12.0		19.0	19.5	20.0	14.2	13.0	11.5
14.0			15.5	15.8	12.5	11.2	10.0
16.0			12.2	12.7	11.0	10.0	9.0
18.0				10.3	9.8	9.0	8.0
20.0				8.6	8.8	8.0	7.2
22.0					7.4	7.2	6.5
24.0					6.3	6.5	5.9
26.0					5.3	5.6	5.4
28.0						4.8	5.0
30.0						4.1	4.3
32.0							3.7
34.0							3.2
I	0	0	0	0	0	0	0
II	0	4.5	9.0	13.5	18.0	22.5	27.3
Reeving	12	6	6	5	4	3	3
Hook	60t						

Rated capacity chart with jib

Unit: t

Main boom angle (°)	Main boom (m) + Jib (m) Outriggers completely extended 16tcounterweight					
	49.0 + 9.5			49.0 + 16.0		
	0°	15°	30°	0°	15°	30°
80	5.0	3.3	2.5	3.0	2.0	1.5
78	5.0	3.3	2.5	3.0	2.0	1.45
76	4.8	3.2	2.5	2.9	1.9	1.4
74	4.5	3.1	2.5	2.7	1.8	1.35
72	4.2	3.0	2.5	2.5	1.7	1.3
70	3.9	2.9	2.4	2.3	1.65	1.25
68	3.6	2.8	2.3	2.1	1.6	1.25
66	3.4	2.7	2.2	2.0	1.55	1.2
64	3.2	2.6	2.1	1.9	1.5	1.2
62	3.0	2.5	2.05	1.8	1.45	1.15
60	2.9	2.4	2.0	1.7	1.4	1.15
58	2.8	2.3	1.95	1.6	1.35	1.1
56	2.5	2.2	1.9	1.55	1.3	1.1
54	2.2	2.1	1.85	1.5	1.25	1.05
52	1.9	1.8	1.7	1.45	1.2	1.05
50	1.6	1.55	1.5	1.35	1.15	1.0
48	1.4	1.35	1.3	1.2	1.1	0.95
46	1.2	1.15	1.1	1.05	0.95	0.9
44	1.0	0.95	0.9	0.9	0.85	0.8
42	0.85	0.8	0.75	0.75	0.7	0.65
40						
Reeving	1					
Hook	8t					

This crane is provided with various rated capacity charts. The operator should select proper rated lifting load referring to resp. rated capacity charts according to actual working conditions

The values in column "I" refer to the extendable length of telescopic cylinder I; The values in column "II" refer to 3 times extendable length of telescopic cylinder II

The working condition marked with asterisk (*) indicates over sides and rear working area

a) For 60t< rated capacity ≤70t, a 70 t hook should be used

b) For 70t< rated capacity ≤80t, an 80 t hook should be used; the reeving is 13 and an additional device should be installed

TECHNICAL SPECIFICATIONS

Crane Superstructure

Main boom	The box-shaped boom consists of 5 U-type boom sections made of low-alloy high-strength steel plate
Jib	2 section lattice jibs(9.5m,16m), offset: 0°,15°,30°
Winch	Main winch and auxiliary winch with variable displacement piston motors and planetary reducers
Slewing mechanism	Hydraulic motor, planetary gear reducer,Slewing cushion valve and normally-closed
BrakeElectrical system	Two-wire system, 24 Volt DC
Operator's cab	The cab with spacious room and man-machine friendly layout offers a comfortable operating experience. AC and heater
Safety devices	Automatic load moment limiter,warning light, limit switch, relief valve,hoisting limit switch etc
Counterweight	16T counterweight
Hydraulic system	The open-type hydraulic system adopts advanced pilot-operated proportional joysticks and hydraulic proportional control system.Hrdraulic tank: 1030L
Derricking mechanism	1 front-mounted hydraulic cylinder with balance valve provides the boom with smooth derricking movements from -1° to 80°

Crane Carrier

Outrigger	H-type outriggers
Engine	YCK10380-60, Rated power: 280KW, max. torque 1800N*m,Fuel tank:400L
Driver's cab	Modern and luxury driver's cab with man-machine friendly layout offers a comfortable operating experience. AC and heater

MAIN TECHNICAL PARAMETERS

Item			Value	Remark
Working performance	Max. rated lifting capacity	kg	80000	
	Max. load moment of basic boom	kN.m	2813	
	Max. load moment of max. length main boom	kN.m	1658	
	Max. lifting height of basic boom	m	13.9	
	Max. lifting height of main boom	m	49.8	These parameters do not include deflection of boom and jib
	Max. lifting height of jib	m	66.1	
Working speeds	Max. hoist rope speed (main winch)	m/min	130	At 4th layer
	Max. hoist rope speed (auxiliary winch)	m/min	130	At 4th layer
	Boom derricking up time	s	55	
	Boom telescoping out time	s	110	
	Slewing speed	r/min	0～1.8	
Driving	Max. working altitude	m	2000	
	Max. driving speed	km/h	89	
	Max. gradeability	%	48	
	Min. turning diameter	m	24	
	Min. ground clearance	mm	304	
	Oil consumption per hundred kilometers	L	39	
Mess	Deadweight in driving condition	kg	45000	Without auxiliary counterweight，moveable counterweight
	Complete vehicle kerb mass	kg	44870	
	Front axle load	kg	19000	
	Rear axle load	kg	26000	
Dimensions	Overall dimensions (L×W×H)	mm	15000×2800×3870	
	Longitudinal distance between outriggers	m	6.6	
	Transversal distance between outriggers	m	Completely extended: 8.0 Intermediately extended: 5.26	
	Tail slewing Radius	mm	4300	
	Main boom length	m	12.5～49	
	Boom angle	°	-1～80	
	Jib length	m	9.5 、16.0	
	Offset	°	0 、15、30	